High Speed LDO Regulators, High PSRR, Low noise, ME6211 Series

General Description

The ME6211 series are highly accurate, low noise, CMOS LDO Voltage Regulators. Offering low output noise, high ripple rejection ratio, low dropout and very fast turn-on times, the ME6211 series is ideal for today's cutting edge mobile phone. Internally the ME6211 includes a reference voltage source, error amplifiers, driver transistors, current limiters and phase compensators. The ME6211's current limiters' foldback circuit also operates as a short protect for the output current limiter and. the output pin. The ME6211 series is also fully compatible with low ESR ceramic capacitors, reducing cost and improving output stability. This high level of output stability is maintained even during frequent load fluctuations, due to the excellent transient response performance and high PSRR achieved across a broad range of frequencies.The CE function allows the output of regulator to be turned off, resulting in greatly reduced power consumption.

Package

- 3-pin SOT89-3，SOT23-3
- 5-pin SOT23-5，SOT353
- 6-pin DFN2*2-6L

Features

- Maximum Output Current: 500mA（V_{IN}=4.3V,V_{OUT}=3.3V）
- Dropout Voltage: 100mV@ I_{OUT} =100mA
- Operating Voltage Range: 2V～6.0V
- Highly Accuracy: ±2％
- Low Power Consumption: 40uA（TYP.）
- Standby Current: 0.1uA（TPY.）
- High Ripple Rejection: 70dB@1KHz（ME6211C33）
- Low output noise: 50uVrms
- Line Regulation: 0.05％（TYP.）

Typical Application

- Mobile phones
- Cordless phones, radio communication equipment
- Portable games
- Cameras, Video cameras
- Reference voltage sources
- Battery powered equipment

Typical Application Circuit

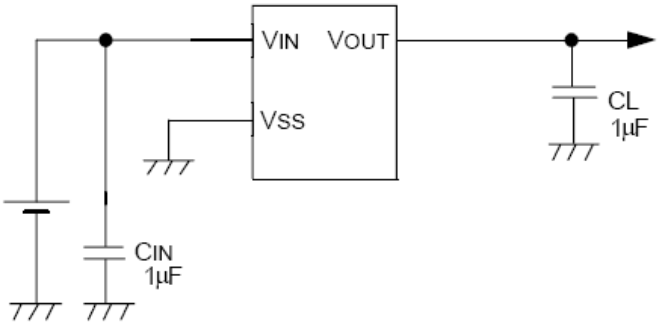

Fig1. ME6211A series

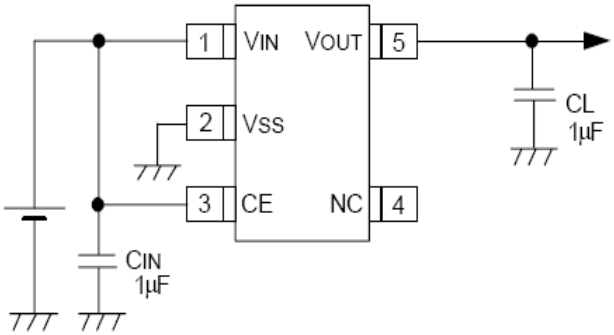

Fig2. ME6211C series

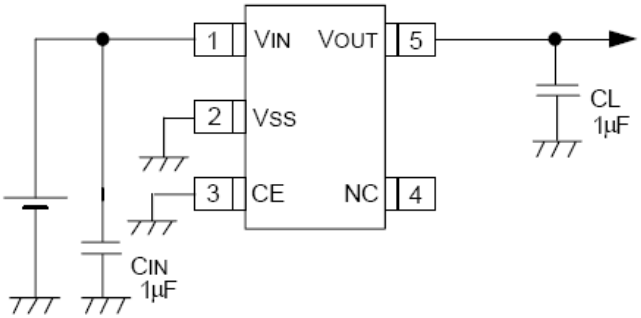

Fig3. ME6211H series

Selection Guide

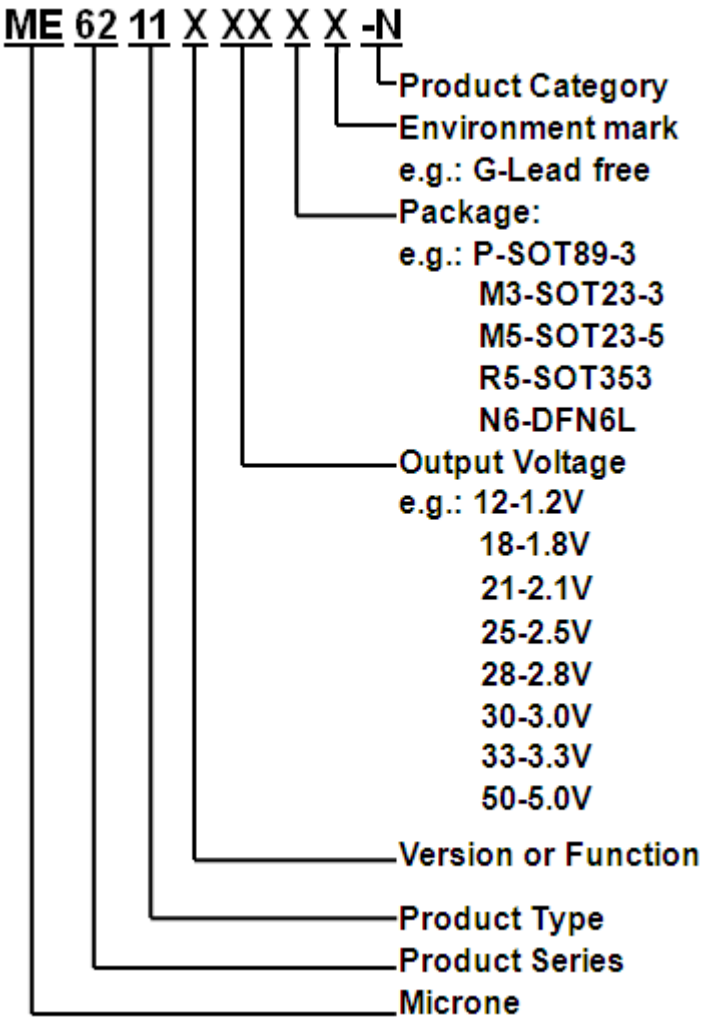

product series	product function	Output voltage	Package
ME6211A12PG	Enable the internal connection of high	1.2V	SOT89-3
ME6211C33M5G	Enable can be set	3.3V	SOT23-5
ME6211H33M5G	Enable connected to a low	3.3V	SOT23-5

Specific voltage and package form pictured above

Pin Configuration

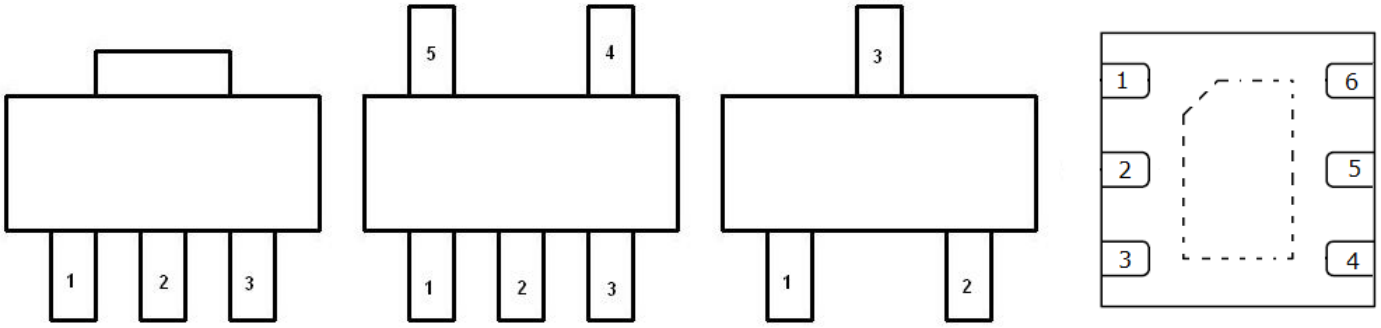

SOT89-3 SOT23-5/SOT353 SOT23-3 DFN2*2-6L

Pin Assignment

ME6211AXXG

Pin Number			Pin Name	Functions
M3	P	P1		
SOT23-3	SOT89-3	SOT89-3		
1	1	2	V_{SS}	Ground
2	3	1	V_{OUT}	Output
3	2	3	V_{IN}	Power Input

The difference of printing on the chip between P and P1 is : P: 6211A , P1: 6211A1

ME6211AXXG-DS

Pin Number	Pin Name	Functions
SOT23-3		
1	V_{IN}	Power Input
2	V_{OUT}	Output
3	V_{SS}	Ground

ME6211CXXG/ ME6211HXXG

Pin Number		Pin Name	Functions
SOT23-5/SOT353	DFN2*2-6L		
1	3	V_{IN}	Power Input
2	2	V_{SS}	Ground
3	1	CE	ON / OFF Control
4	5,6	NC	No Connect
5	4	V_{OUT}	Output

Block Diagram

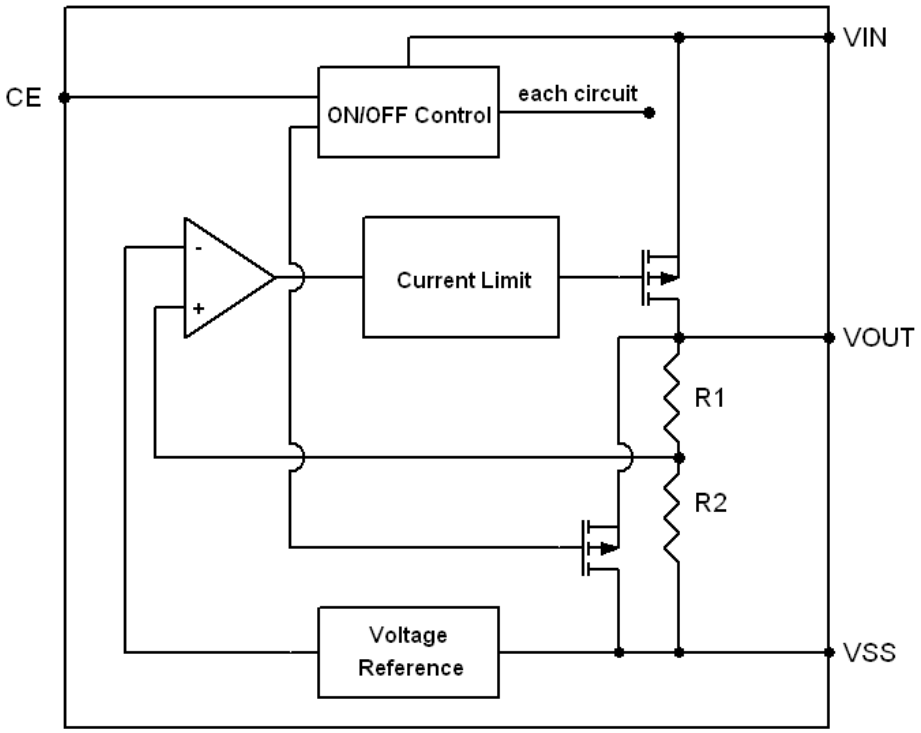

Absolute Maximum Ratings

Parameter		Symbol	Ratings	Units
Input Voltage		V_{IN}	6.5	V
Output Current		I_{OUT}	600	mA
Output Voltage		V_{OUT}	Vss-0.3～V_{IN} +0.3	V
CE Pin Voltage		V_{CE}	Vss-0.3～V_{IN} +0.3	V
Power Dissipation	SOT23	P_D	300	mW
	SOT353		250	
	DFN2*2-6L		300	
	SOT89		500	
Operating Temperature Range		T_{OPR}	－40～＋150	℃
Storage Temperature Range		T_{STG}	－40～＋150	℃

Electrical Characteristics

ME6211C12 (V_{IN}= V_{OUT}+1V，V_{CE} = V_{IN}，C_{IN}=C_L=1uF，Ta=25°C ,unless otherwise noted)

Parameter	Symbol	Conditions		Min.	Typ.	Max.	Units
Output Voltage	V_{OUT}(E) (Note 2)	I_{OUT}=30mA, V_{IN}= V_{OUT}+1V		X 0.98	V_{OUT} (T) (Note 1)	X 1.02	V
Maximum Output Current	I_{OUTMAX}	V_{IN}= V_{OUT}+1V			300		mA
Load Regulation	ΔV_{OUT}	V_{IN}= V_{OUT}+1V , 1mA≤I_{OUT}≤100mA			8		mV
Dropout Voltage (Note 1)	V_{DIF1}	I_{OUT} =100mA			280		mV
	V_{DIF2}	I_{OUT} =200mA			500		mV
Supply Current	I_{SS}	V_{IN}= V_{OUT}+1V			40		μA
Stand-by Current	I_{CEL}	V_{CE}＝0V			0.1		μA
Line Regulation	$\frac{\Delta V_{OUT}}{\Delta V_{IN} \cdot V_{OUT}}$	I_{OUT} =40mA V_{OUT}+1V ≤V_{IN}≤6.5V			0.03		%/V
CE "High" Voltage	VCEH	Start up		1.0			V
CE "Low" Voltage	VCEL	Shut down				0.5	V
Output noise	EN	I_{OUT} =40mA，300Hz~50kHz			50		uVrms
Ripple Rejection Rate	PSRR	V_{IN} = [V_{OUT} +1]V +1Vp-pAC	I_{OUT}=10mA, 1kHZ		70		dB
			I_{OUT}=100mA, 10kHZ		62		

ME6211C18 (V_{IN}= V_{OUT}+1V，V_{CE} = V_{IN}，C_{IN}=C_L=1uF，Ta=25°C, unless otherwise noted)

Parameter	Symbol	Conditions		Min.	Typ.	Max.	Units
Output Voltage	V_{OUT}(E) (Note 2)	I_{OUT}=30mA, V_{IN}= V_{OUT}+1V		X 0.98	V_{OUT} (T) (Note 1)	X 1.02	V
Maximum Output Current	I_{OUTMAX}	V_{IN}= V_{OUT}+1V			300		mA
Load Regulation	ΔV_{OUT}	V_{IN}= V_{OUT}+1V , 1mA≤I_{OUT}≤100mA			9		mV
Dropout Voltage (Note 1)	V_{DIF1}	I_{OUT} =100mA			200		mV
	V_{DIF2}	I_{OUT} =200mA			400		mV
Supply Current	I_{SS}	V_{IN}= V_{OUT}+1V			40		μA
Stand-by Current	I_{CEL}	V_{CE}＝0V			0.1		μA
Line Regulation	$\frac{\Delta V_{OUT}}{\Delta V_{IN} \cdot V_{OUT}}$	I_{OUT} =40mA V_{OUT}+1V ≤V_{IN}≤6.5V			0.05		%/V
CE "High" Voltage	VCEH	Start up		1.0			V
CE "Low" Voltage	VCEL	Shut down				0.5	V
Output noise	EN	I_{OUT} =40mA，300Hz~50kHz			50		uVrms
Ripple Rejection Rate	PSRR	V_{IN} = [V_{OUT} +1]V+1Vp-pAC	I_{OUT}=10mA, 1kHZ		70		dB
			I_{OUT}=100mA, 10kHZ		62		

ME6211C25 (V_{IN}= V_{OUT}+1V，V_{CE} = V_{IN}，C_{IN}=C_L=1uF，Ta=25°C, unless otherwise noted)

Parameter	Symbol	Conditions		Min.	Typ.	Max.	Units
Output Voltage	V_{OUT}(E) (Note 2)	I_{OUT}=30mA, V_{IN}= V_{OUT}+1V		X 0.98	V_{OUT} (T) (Note 1)	X 1.02	V
Maximum Output Current	I_{OUTMAX}	V_{IN}= V_{OUT}+1V			400		mA
Load Regulation	ΔV_{OUT}	V_{IN}= V_{OUT}+1V , 1mA≤I_{OUT}≤100mA			9		mV
Dropout Voltage (Note 1)	V_{DIF1}	I_{OUT} =100mA			110		mV
	V_{DIF2}	I_{OUT} =200mA			220		mV
Supply Current	I_{SS}	V_{IN}= V_{OUT}+1V			40		μA
Stand-by Current	I_{CEL}	V_{CE}＝0V			0		μA
Line Regulation	$\frac{\Delta V_{OUT}}{\Delta V_{IN} \cdot V_{OUT}}$	I_{OUT} =40mA V_{OUT}+1V ≤V_{IN}≤6.5V			0.04		%/V
CE“High”Voltage	VCEH	Start up		1.0			V
CE “Low” Voltage	VCEL	Shut down				0.5	V
Output noise	EN	I_{OUT} =40mA，300Hz~50kHz			50		uVrms
Ripple Rejection Rate	PSRR	V_{IN}=[V_{OUT}+1]V +1Vp-pAC	I_{OUT}=10mA, 1kHZ		70		dB
			I_{OUT}=100mA, 10kHZ		62		
			I_{OUT}=200mA, 10kHZ		62		
Short-circuit Current	I_{SHORT}	V_{IN}= V_{OUT}+1V, V_{CE}＝V_{IN}, V_{OUT} ＝0V			120		mA

ME6211C28 (V_{IN}= V_{OUT}+1V，V_{CE} = V_{IN}，C_{IN}=C_L=1uF，Ta=25°C, unless otherwise noted)

Parameter	Symbol	Conditions		Min.	Typ.	Max.	Units
Output Voltage	V_{OUT}(E) (Note 2)	I_{OUT}=30mA, V_{IN}= V_{OUT}+1V		X 0.98	V_{OUT} (T) (Note 1)	X 1.02	V
Maximum Output Current	I_{OUTMAX}	V_{IN}= V_{OUT}+1V			450		mA
Load Regulation	ΔV_{OUT}	V_{IN}= V_{OUT}+1V , 1mA≤I_{OUT}≤100mA			7		mV
Dropout Voltage (Note 1)	V_{DIF1}	I_{OUT} =100mA			110		mV
	V_{DIF2}	I_{OUT} =200mA			220		mV
Supply Current	I_{SS}	V_{IN}= V_{OUT}+1V			50		μA
Stand-by Current	I_{CEL}	V_{CE}＝0V			0		μA
Line Regulation	$\frac{\Delta V_{OUT}}{\Delta V_{IN} \cdot V_{OUT}}$	I_{OUT} =40mA V_{OUT}+1V ≤V_{IN}≤6.5V			0.04		%/V
CE“High”Voltage	VCEH	Start up		1.0			V
CE “Low” Voltage	VCEL	Shut down				0.5	V
Output noise	EN	I_{OUT} =40mA，300Hz~50kHz			50		uVrms
Ripple Rejection Rate	PSRR	V_{IN}=[V_{OUT}+1]V +1Vp-pAC	I_{OUT}=10mA, 1kHZ		70		dB
			I_{OUT}=100mA, 10kHZ		62		

			I_{OUT}=200mA, 10kHZ		62		
Short-circuit Current	I_{SHORT}	V_{IN}= V_{OUT}+1V, V_{CE}=V_{IN}, V_{OUT} =0V			120		mA

ME6211C30 (V_{IN}= V_{OUT}+1V，V_{CE} = V_{IN}，C_{IN}=C_L=1uF，Ta=25°C, unless otherwise noted)

Parameter	Symbol	Conditions		Min.	Typ.	Max.	Units
Output Voltage	V_{OUT}(E) (Note 2)	I_{OUT}=30mA, V_{IN}= V_{OUT}+1V		X 0.98	V_{OUT} (T) (Note 1)	X 1.02	V
Maximum Output Current	I_{OUTMAX}	V_{IN}= V_{OUT}+1V			500		mA
Load Regulation	ΔV_{OUT}	V_{IN}= V_{OUT}+1V , 1mA≤I_{OUT}≤100mA			8		mV
Dropout Voltage (Note 1)	V_{DIF1}	I_{OUT} =100mA			100		mV
	V_{DIF2}	I_{OUT} =200mA			210		mV
Supply Current	I_{SS}	V_{IN}= V_{OUT}+1V			60		μA
Stand-by Current	I_{CEL}	V_{CE}=0V			0		μA
Line Regulation	$\frac{\Delta V_{OUT}}{\Delta V_{IN} \cdot V_{OUT}}$	I_{OUT} =40mA V_{OUT}+1V ≤V_{IN}≤6.5V			0.05		%/V
CE "High" Voltage	VCEH	Start up		1.0			V
CE "Low" Voltage	VCEL	Shut down				0.5	V
Output noise	EN	I_{OUT} =40mA，300Hz~50kHz			50		uVrms
Ripple Rejection Rate	PSRR	V_{IN} = [V_{OUT} +1]V +1Vp-pAC	I_{OUT}=10mA, 1kHZ		70		dB
			I_{OUT}=100mA, 10kHZ		62		
			I_{OUT}=200mA, 10kHZ		62		
Short-circuit Current	I_{SHORT}	V_{IN}= V_{OUT}+1V, V_{CE}=V_{IN}, V_{OUT} =0V			120		mA

ME6211C33 (V_{IN}= V_{OUT}+1V，V_{CE} = V_{IN}，C_{IN}=C_L=1uF，Ta=25°C, unless otherwise noted)

Parameter	Symbol	Conditions	Min.	Typ.	Max.	Units
Output Voltage	V_{OUT}(E) (Note 2)	I_{OUT}=30mA, V_{IN}= V_{OUT}+1V	X 0.98	V_{OUT} (T) (Note 1)	X 1.02	V
Maximum Output Current	I_{OUTMAX}	V_{IN}= V_{OUT}+1V		500		mA
Load Regulation	ΔV_{OUT}	V_{IN}= V_{OUT}+1V , 1mA≤I_{OUT}≤100mA		9		mV
Dropout Voltage (Note 1)	V_{DIF1}	I_{OUT} =100mA		120		mV
	V_{DIF2}	I_{OUT} =200mA		260		mV
Supply Current	I_{SS}	V_{IN}= V_{OUT}+1V		60		μA
Stand-byCurrent	I_{CEL}	V_{CE}=0V		0.1		μA
Line Regulation	$\frac{\Delta V_{OUT}}{\Delta V_{IN} \cdot V_{OUT}}$	I_{OUT} =40mA V_{OUT}+1V ≤V_{IN}≤6.5V		0.05		%/V
CE "High" Voltage	VCEH	Start up	1.0			V

CE "Low" Voltage	VCEL	Shut down			0.5	V
Output noise	EN	I_{OUT} =40mA，300Hz~50kHz		50		uVrms
Ripple Rejection Rate	PSRR	V_{IN} = [V_{OUT} +1]V +1Vp-pAC	I_{OUT}=10mA ,1kHZ	70		dB
			I_{OUT}=100mA,10kHZ	62		
			I_{OUT}=200mA,10kHZ	62		
Short-circuit Current	I_{SHORT}	V_{IN}= V_{OUT}+1V, V_{CE}=V_{IN}, V_{OUT} =0V		150		mA

ME6211C50 (V_{IN}= V_{OUT}+1V，V_{CE} = V_{IN}，C_{IN}=C_L=1uF，Ta=25°C, unless otherwise noted)

Parameter	Symbol	Conditions		Min.	Typ.	Max.	Units
Output Voltage	V_{OUT}(E) (Note 2)	I_{OUT}=30mA, V_{IN}= V_{OUT}+1V		X 0.98	V_{OUT} (T) (Note 1)	X 1.02	V
Maximum Output Current	I_{OUTMAX}	V_{IN}= V_{OUT}+1V			500		mA
Load Regulation	ΔV_{OUT}	V_{IN}= V_{OUT}+1V , 1mA≤I_{OUT}≤100mA			8		mV
Dropout Voltage (Note 1)	V_{DIF1}	I_{OUT} =100mA			100		mV
	V_{DIF2}	I_{OUT} =200mA			200		mV
Supply Current	I_{SS}	V_{IN}= V_{OUT}+1V			40		μA
Stand-by Current	I_{CEL}	V_{CE}=0V			0		μA
Line Regulation	$\frac{\Delta V_{OUT}}{\Delta V_{IN} \cdot V_{OUT}}$	I_{OUT} =40mA V_{OUT}+1V ≤V_{IN}≤6.5V			0.05		%/V
CE "High" Voltage	VCEH	Start up		1.0			V
CE "Low" Voltage	VCEL	Shut down				0.7	V
Output noise	EN	I_{OUT} =40mA，300Hz~50kHz			50		uVrms
Ripple Rejection Rate	PSRR	V_{IN} = [V_{OUT} +1]V +1Vp-pAC	I_{OUT}=10mA, 1kHZ		70		dB
			I_{OUT}=100mA, 10kHZ		62		
			I_{OUT}=200mA, 10kHZ		62		
Short-circuit Current	I_{SHORT}	V_{IN}= V_{OUT}+1V, V_{CE}=V_{IN}, V_{OUT} =0V			110		mA

ME6211A30 (V_{IN}= V_{OUT}+1V，C_{IN}=C_L=1uF，Ta=25°C, unless otherwise noted)

Parameter	Symbol	Conditions	Min.	Typ.	Max.	Units
Output Voltage	V_{OUT}(E) (Note 2)	I_{OUT}=30mA, V_{IN}= V_{OUT}+1V	X 0.98	V_{OUT} (T) (Note 1)	X 1.02	V
Maximum Output Current	I_{OUTMAX}	V_{IN}= V_{OUT}+1V		500		mA
Load Regulation	ΔV_{OUT}	V_{IN}= V_{OUT}+1V , 1mA≤I_{OUT}≤100mA		8		mV
Dropout Voltage	V_{DIF1}	I_{OUT} =100mA		100		mV

(Note 1)	V_{DIF2}	I_{OUT} =200mA		210		mV
Supply Current	I_{SS}	V_{IN}= V_{OUT}+1V		60		μA
Line Regulation	$\frac{\Delta V_{OUT}}{\Delta V_{IN} \cdot V_{OUT}}$	I_{OUT} =40mA V_{OUT}+1V ≤V_{IN}≤6.5V		0.05		%/V
Output noise	EN	I_{OUT} =40mA，300Hz~50kHz		50		uVrms
Ripple Rejection Rate	PSRR	V_{IN} = [V_{OUT} +1]V +1Vp-pAC	I_{OUT}=10mA, 1kHZ	70		dB
			I_{OUT}=100mA, 10kHZ	62		
			I_{OUT}=200mA, 10kHZ	62		
Short-circuit Current	I_{SHORT}	V_{IN}= V_{OUT}+1V, V_{CE}＝V_{IN}, V_{OUT} ＝0V		120		mA

ME6211A33 (V_{IN}= V_{OUT}+1V，C_{IN}=C_L=1uF，Ta=25°C,unless otherwise noted)

Parameter	Symbol	Conditions		Min.	Typ.	Max.	Units
Output Voltage	V_{OUT}(E) (Note 2)	I_{OUT}=30mA, V_{IN}= V_{OUT}+1V		X 0.98	V_{OUT} (T) (Note 1)	X 1.02	V
Maximum Output Current	I_{OUTMAX}	V_{IN}= V_{OUT}+1V			500		mA
Load Regulation	ΔV_{OUT}	V_{IN}= V_{OUT}+1V , 1mA≤I_{OUT}≤100mA			9		mV
Dropout Voltage (Note 1)	V_{DIF1}	I_{OUT} =100mA			120		mV
	V_{DIF2}	I_{OUT} =200mA			260		mV
Supply Current	I_{SS}	V_{IN}= V_{OUT}+1V			60		μA
Line Regulation	$\frac{\Delta V_{OUT}}{\Delta V_{IN} \cdot V_{OUT}}$	I_{OUT} =40mA V_{OUT}+1V ≤V_{IN}≤6.5V			0.05		%/V
Output noise	EN	I_{OUT} =40mA，300Hz~50kHz			50		uVrms
Ripple Rejection Rate	PSRR	V_{IN} = [V_{OUT} +1]V +1Vp-pAC	I_{OUT}=10mA, 1kHZ		70		dB
			I_{OUT}=100mA, 10kHZ		62		
			I_{OUT}=200mA, 10kHZ		62		
Short-circuit Current	I_{SHORT}	V_{IN}= V_{OUT}+1V,, V_{OUT}＝0V			150		mA

ME6211A25 (V_{IN}= V_{OUT}+1V，C_{IN}=C_L=1uF，Ta=25°C,unless otherwise noted)

Parameter	Symbol	Conditions	Min.	Typ.	Max.	Units
Output Voltage	V_{OUT}(E) (Note 2)	I_{OUT}=30mA, V_{IN}= V_{OUT}+1V	X 0.98	V_{OUT} (T) (Note 1)	X 1.02	V
Maximum Output Current	I_{OUTMAX}	V_{IN}= V_{OUT}+1V		400		mA
Load Regulation	ΔV_{OUT}	V_{IN}= V_{OUT}+1V , 1mA≤I_{OUT}≤100mA		9		mV
Dropout Voltage (Note 1)	V_{DIF1}	I_{OUT} =100mA		80		mV
	V_{DIF2}	I_{OUT} =200mA		180		mV

Supply Current	I_{SS}	$V_{IN}= V_{OUT}+1V$		40		μA
Line Regulation	$\frac{\Delta V_{OUT}}{\Delta V_{IN} \cdot V_{OUT}}$	I_{OUT} =40mA $V_{OUT}+1V \le V_{IN} \le 6.5V$		0.05		%/V
Output noise	EN	I_{OUT} =40mA，300Hz~50kHz		50		uVrms
Ripple Rejection Rate	PSRR	V_{IN} = [V_{OUT} +1]V +1Vp-pAC	I_{OUT}=10mA ,1kHZ	70		dB
			I_{OUT}=100mA,10kHZ	62		
			I_{OUT}=200mA,10kHZ	62		
Short-circuit Current	I_{SHORT}	$V_{IN}= V_{OUT}+1V$,, V_{OUT}＝0V		150		mA

ME6211H15

($V_{IN}= V_{OUT}+1V$，V_{CE} = GND，C_{IN}=C_L=1uF，Ta=25°C, unless otherwise noted)

Parameter	Symbol	Conditions		Min.	Typ.	Max.	Units
Output Voltage	V_{OUT}(E) (Note 2)	I_{OUT}=30mA, $V_{IN}= V_{OUT}+1V$		X 0.98	V_{OUT} (T) (Note 1)	X 1.02	V
Maximum Output Current	I_{OUTMAX}	$V_{IN}= V_{OUT}+1V$			300		mA
Load Regulation	ΔV_{OUT}	$V_{IN}= V_{OUT}+1V$, $1mA \le I_{OUT} \le 100mA$			9		mV
Dropout Voltage (Note 1)	V_{DIF1}	I_{OUT} =100mA			200		mV
	V_{DIF2}	I_{OUT} =200mA			400		mV
Supply Current	I_{SS}	$V_{IN}= V_{OUT}+1V$			40		μA
Stand-by Current	I_{CEL}	V_{CE}＝V_{IN}			0.1		μA
Line Regulation	$\frac{\Delta V_{OUT}}{\Delta V_{IN} \cdot V_{OUT}}$	I_{OUT} =40mA $V_{OUT}+1V \le V_{IN} \le 6.5V$			0.05		%/V
CE “High” Voltage	VCEH	Shut down		1.0			V
CE “Low” Voltage	VCEL	Start up				0.4	V
Output noise	EN	I_{OUT} =40mA，300Hz~50kHz			50		uVrms
Ripple Rejection Rate	PSRR	V_{IN} = [V_{OUT} +1]V+1Vp-pAC	I_{OUT}=10mA,1kHZ		70		dB

Note ：

1. V_{OUT} (T) ： Specified Output Voltage

2.V_{OUT} (E) ： Effective Output Voltage (Ie. The output voltage when “V_{OUT} (T)+1.0V”is provided at the Vin pin while maintaining a certain Iout value.)

3.V_{DIF}： V_{IN1} –V_{OUT} (E)’

V_{IN1} ： The input voltage when V_{OUT}(E)’ appears as input voltage is gradually decreased.

V_{OUT} (E)’=A voltage equal to 98% of the output voltage whenever an amply stabilized Iout {V_{OUT} (T)+1.0V} is input.

Type Characteristics

（1）Output CurrentVS.Output Voltage（VIN=Vout+1, **Ta = 25 °C**）

ME6211C33M5G

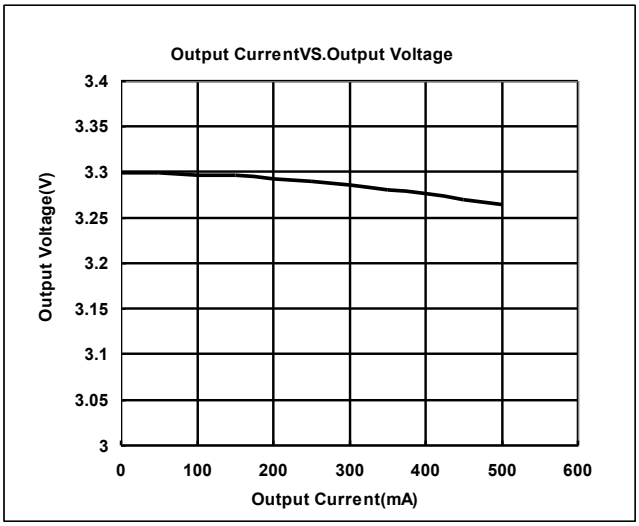

ME6211C30M5G

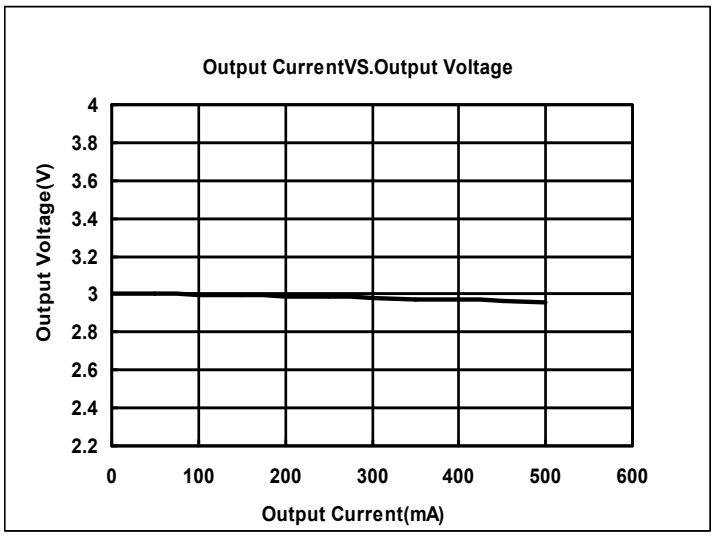

ME6211C28M5G

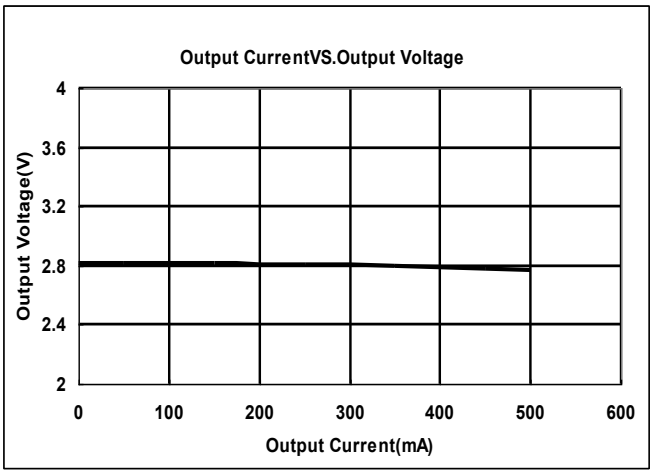

ME6211C18M5G

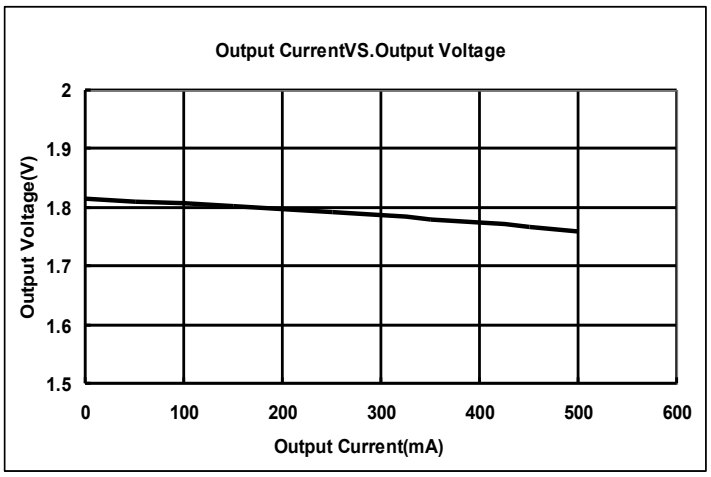

（2）Input VoltageVS.Output Voltage（**Ta = 25 °C**）

ME6211C33M5G

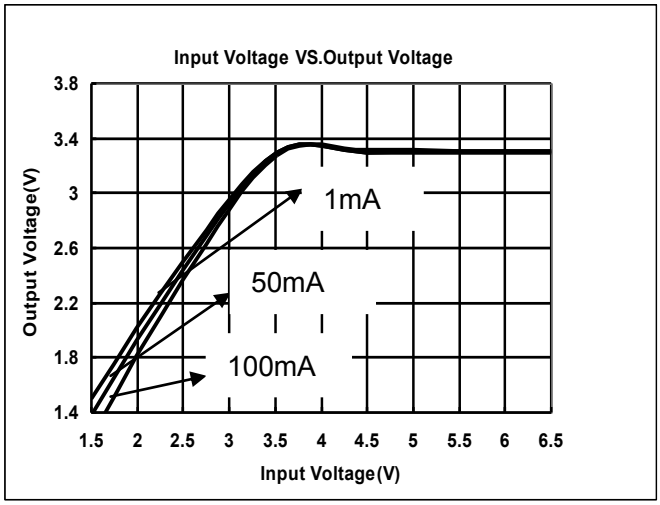

ME6211C30M5G

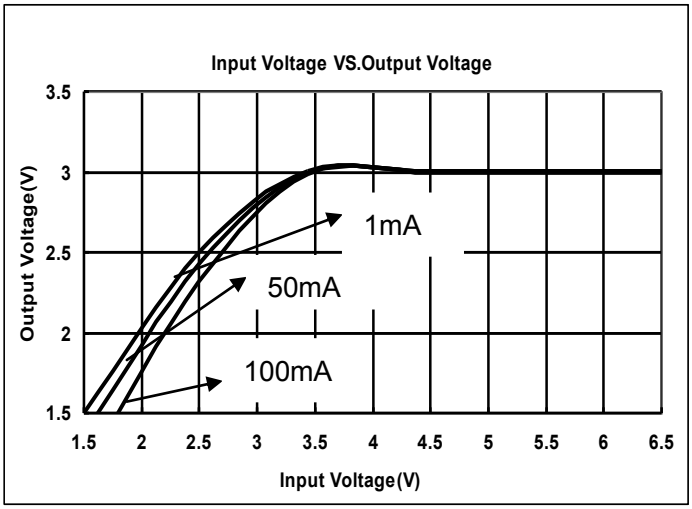

ME6211C28M5G

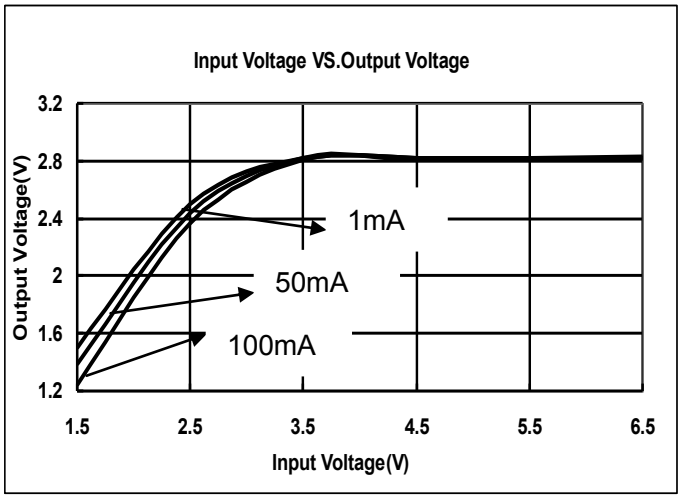

ME6211C18M5G

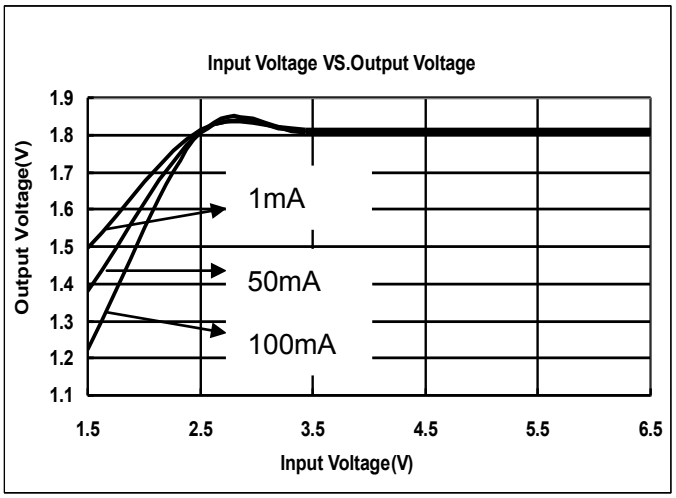

（3）Output Current VS.Droput Voltage（VIN=Vout+1V,**Ta = 25 °C**）

ME6211C33M5G

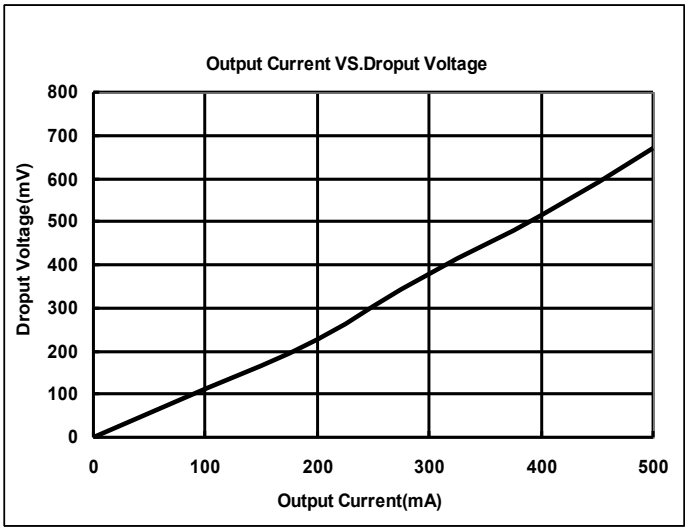

ME6211C30M5G

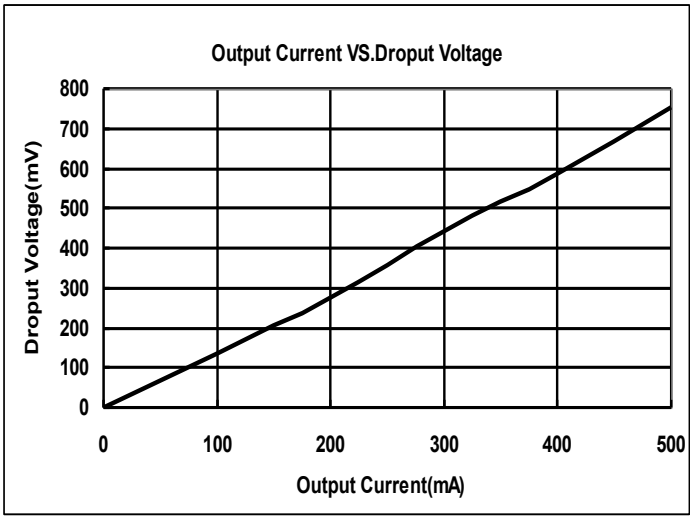

ME6211C28M5G

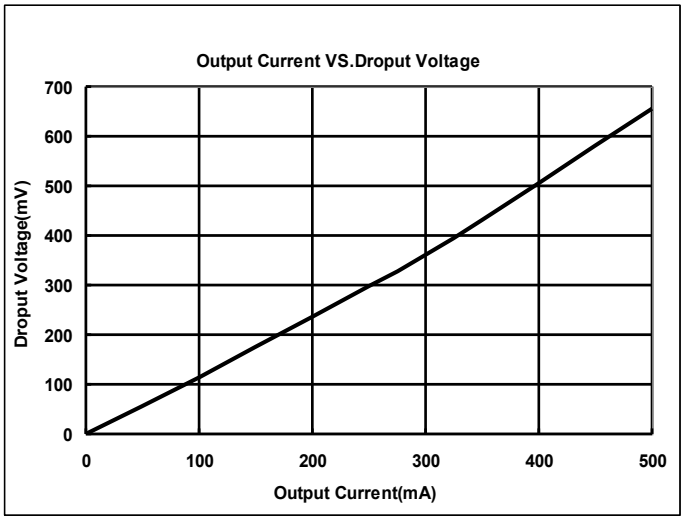

ME6211C18M5G

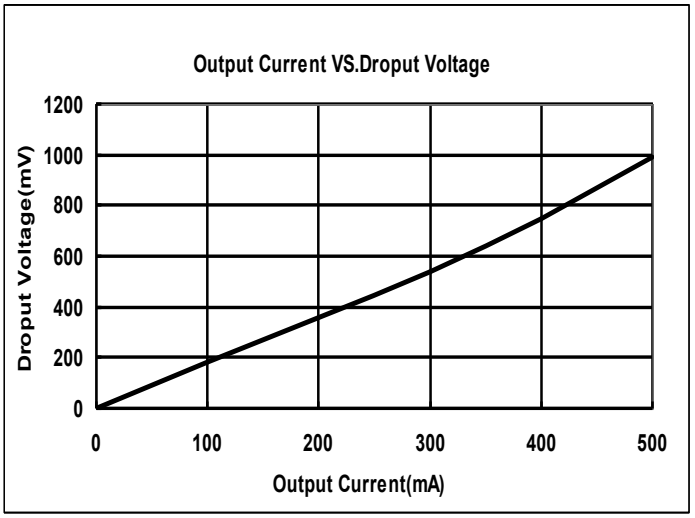

（4）Input Voltage VS. Supply Current（**Ta = 25 °C**）

ME6211C33M5G

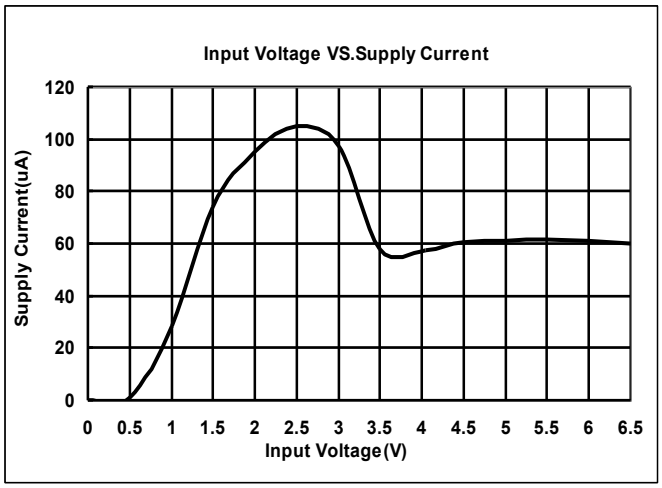

ME6211C30M5G

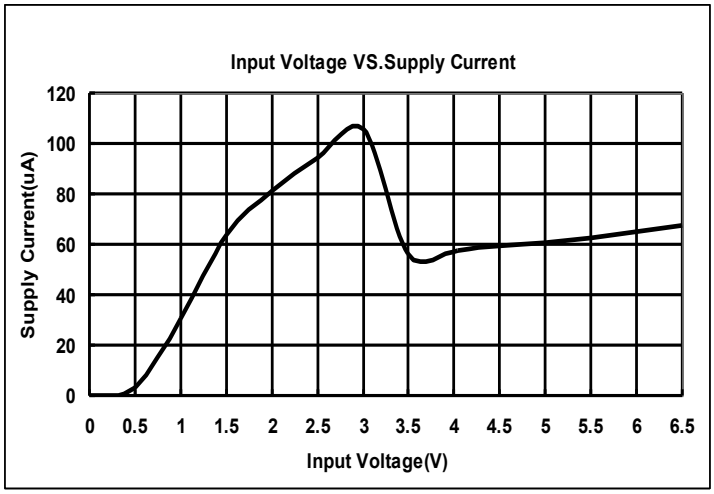

ME6211C28M5G

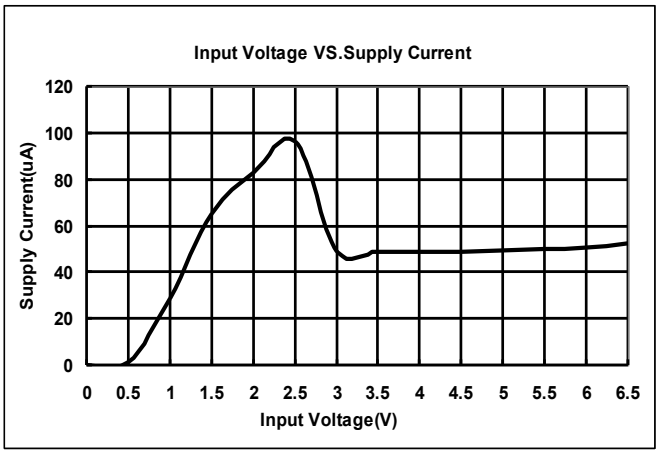

ME6211C18M5G

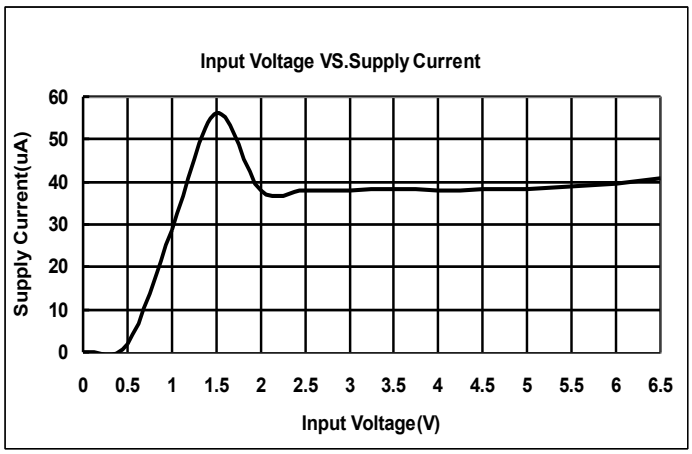

Packaging Information

- SOT23-3

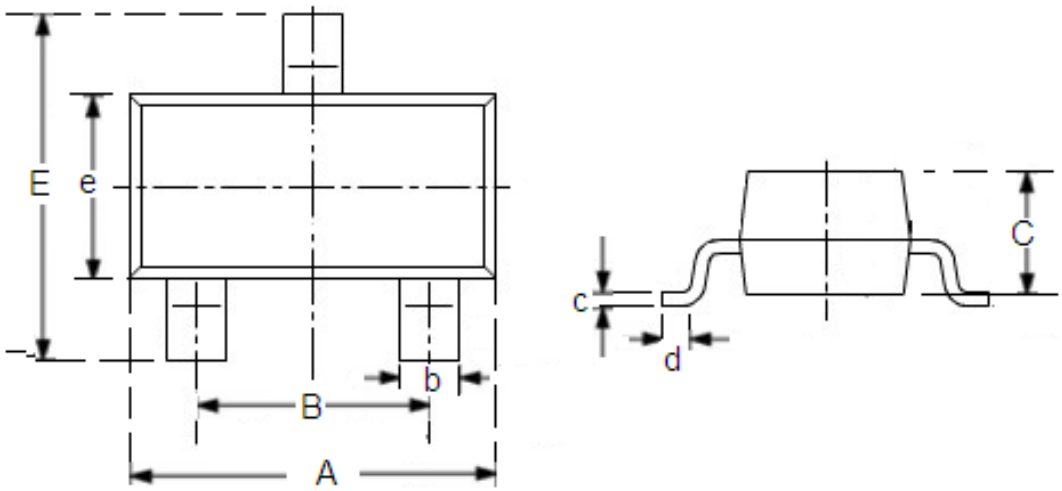

DIM	Millimeters		Inches	
	Min	Max	Min	Max
A	2.7	3.1	0.1063	0.122
B	1.7	2.1	0.0669	0.0827
b	0.35	0.5	0.0138	0.0197
C	1.0	1.2	0.0394	0.0472
c	0.1	0.25	0.0039	0.0098
d	0.2	-	0.0079	-
E	2.6	3.0	0.1023	0.1181
e	1.5	1.8	0.059	0.0708

● SOT89-3

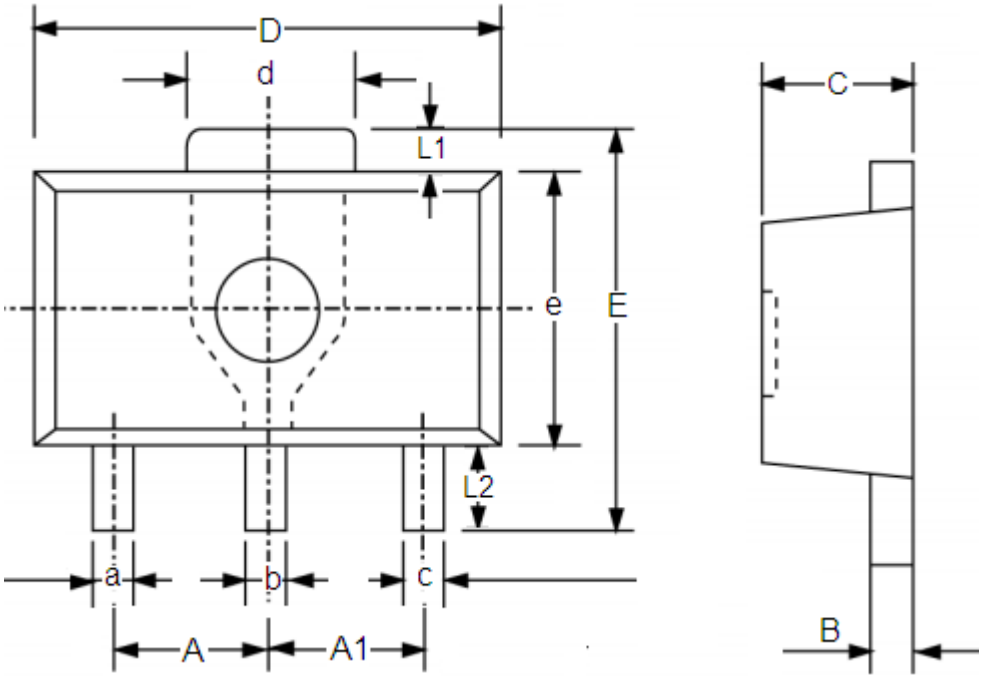

DIM	Millimeters		Inches	
	Min	Max	Min	Max
A	1.4	1.6	0.0551	0.0630
A1	1.4	1.6	0.0551	0.0630
a	0.36	0.48	0.0142	0.0189
b	0.41	0.53	0.0161	0.0209
c	0.36	0.48	0.0142	0.0189
d	1.4	1.75	0.0551	0.0689
B	0.38	0.43	0.015	0.0169
C	1.4	1.6	0.0551	0.0630
D	4.4	4.6	0.1732	0.181
E	-	4.25	-	0.1673
e	2.4	2.6	0.0945	0.1023
L1	0.4	-	0.0157	-
L2	0.8	-	0.0315	-

● SOT23-5

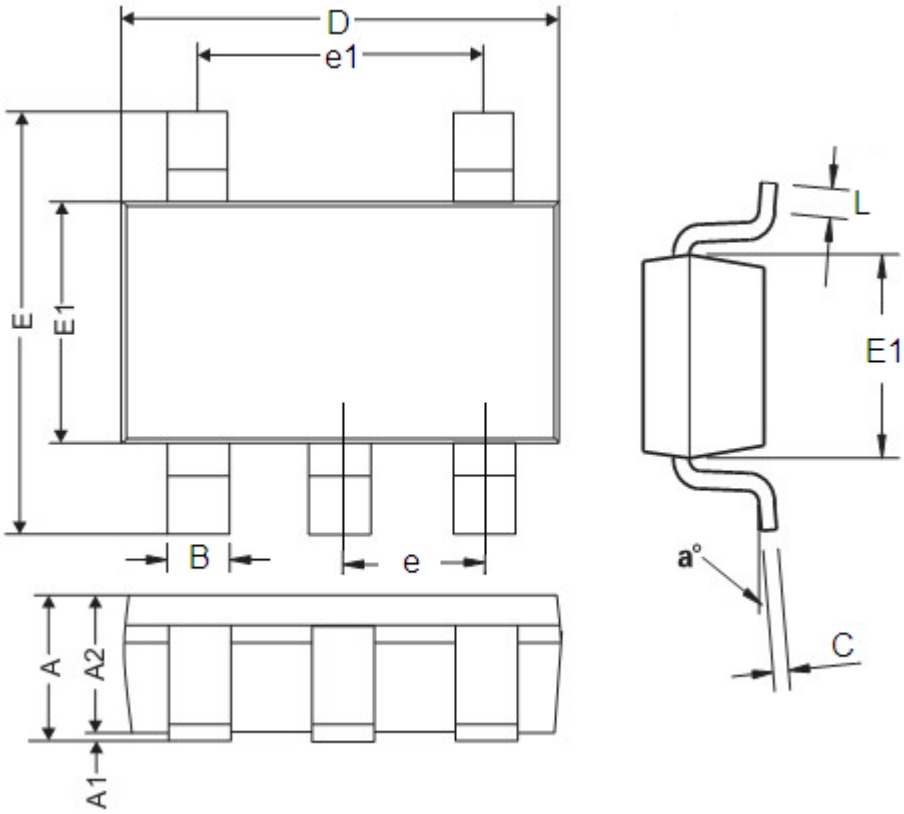

DIM	Millimeters		Inches	
	Min	Max	Min	Max
A	0.9	1.45	0.0354	0.0570
A1	0	0.15	0	0.0059
A2	0.9	1.3	0.0354	0.0511
B	0.2	0.5	0.0078	0.0196
C	0.09	0.26	0.0035	0.0102
D	2.7	3.10	0.1062	0.1220
E	2.2	3.2	0.0866	0.1181
E1	1.30	1.80	0.0511	0.0708
e	0.95REF		0.0374REF	
e1	1.90REF		0.0748REF	
L	0.10	0.60	0.0039	0.0236
a^0	0^0	30^0	0^0	30^0

● SOT353

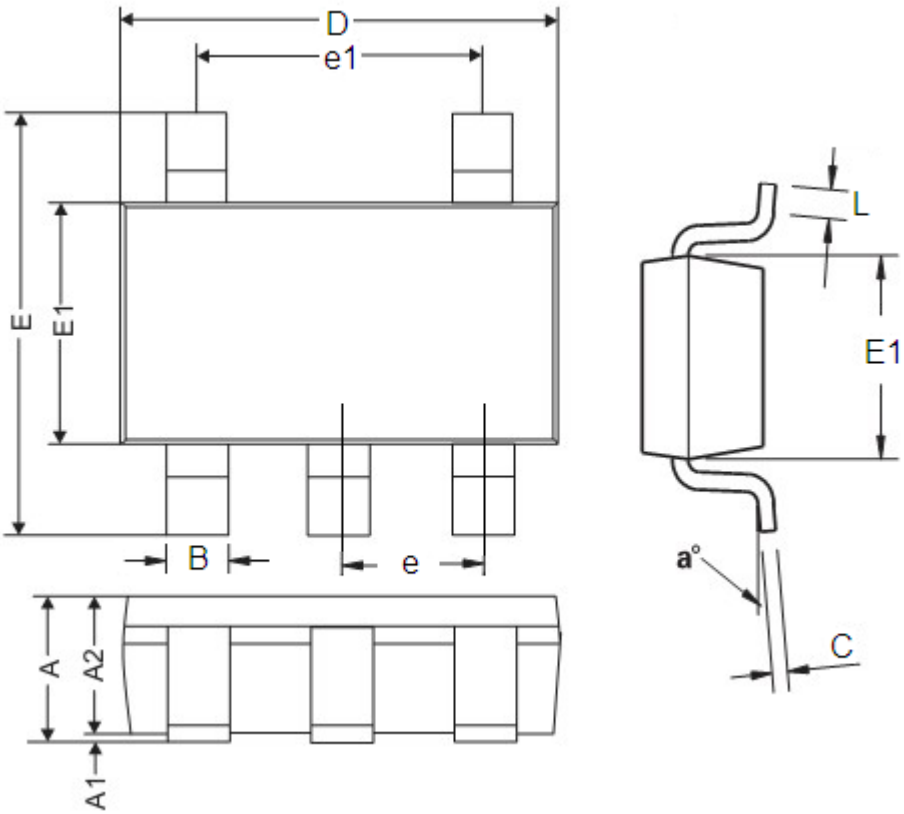

DIM	Millimeters		Inches	
	Min	Max	Min	Max
A	0.9	1.1	0.035	0.043
A1	0.0	0.10	0.00	0.004
A2	0.9	1.0	0.035	0.039
B	0.15	0.35	0.006	0.014
C	0.08	0.15	0.003	0.006
D	2.0	2.2	0.079	0.087
E	2.15	2.45	0.085	0.096
E1	1.15	1.35	0.045	0.096
e	0.65 REF		0.026 REF	
e1	1.20	1.4	0.047	0.055
L	0.26	0.46	0.01	0.018
a^0	0^0	8^0	0^0	8^0

- DFN2*2-6L

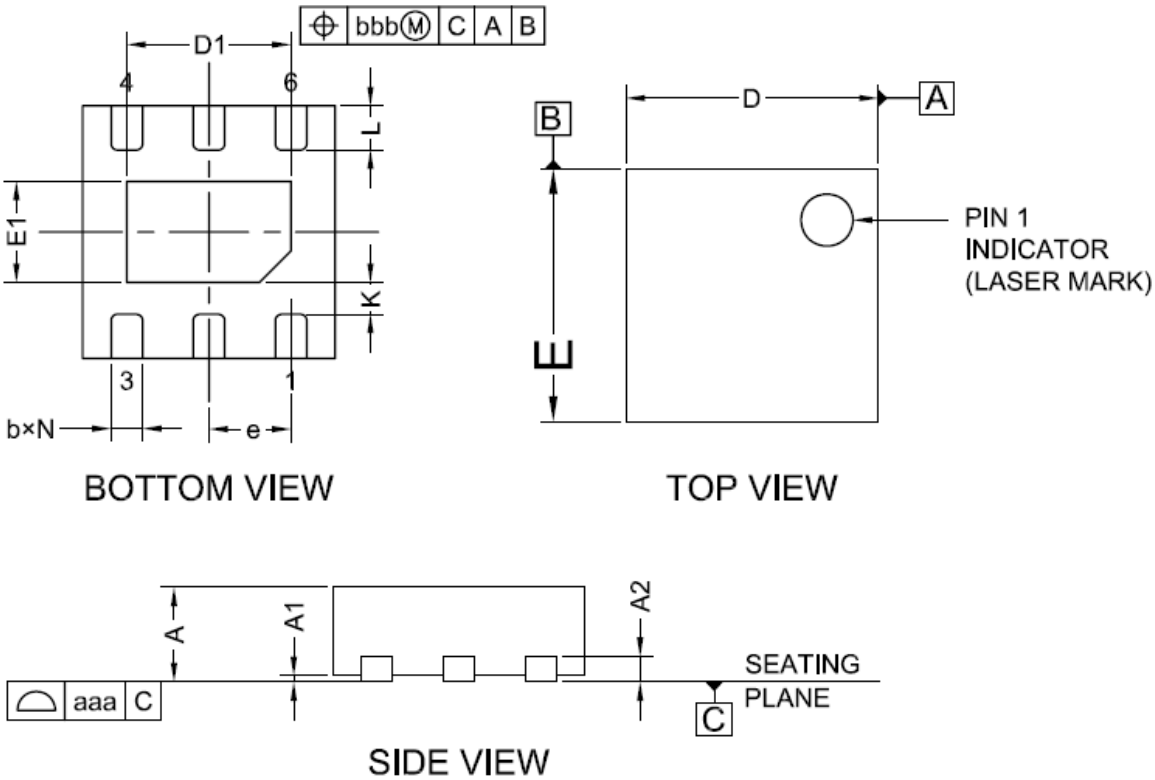

DIM	Dimension (mm)		
	Min	Typ	Max
A	0.70	0.75	0.80
A1	0.00	0.02	0.05
A2	0.203 REF		
b	0.20	0.25	0.30
D	1.95	2.00	2.05
D1	1.20	1.30	1.40
E	1.95	2.00	2.05
E1	0.70	0.80	0.90
e	0.65 REF		
L	0.30	0.35	0.40
K	0.20 min		
N	6		
aaa	0.08		
bbb	0.10		

- The information described herein is subject to change without notice.
- Nanjing Micro One Electronics Inc is not responsible for any problems caused by circuits or diagrams described herein whose related industrial properties, patents, or other rights belong to third parties. The application circuit examples explain typical applications of the products, and do not guarantee the success of any specific mass-production design.
- Use of the information described herein for other purposes and/or reproduction or copying without the express permission of Nanjing Micro One Electronics Inc is strictly prohibited.
- The products described herein cannot be used as part of any device or equipment affecting the human body, such as exercise equipment, medical equipment, security systems, gas equipment, or any apparatus installed in airplanes and other vehicles, without prior written permission of Nanjing Micro One Electronics Inc.
- Although Nanjing Micro One Electronics Inc exerts the greatest possible effort to ensure high quality and reliability, the failure or malfunction of semiconductor products may occur. The user of these products should therefore give thorough consideration to safety design, including redundancy, fire-prevention measures, and malfunction prevention, to prevent any accidents, fires, or community damage that may ensue.